630ml White BioCane Takeaway Containers B-SLB-630-W-UK

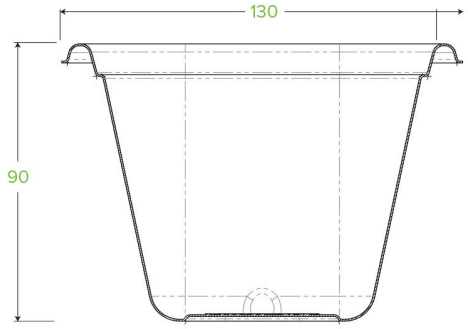

Our plastic-free sugarcane takeaway containers are made from rapidly renewable sugarcane pulp, a by-product of the sugar refining industry. They are microwave and oven friendly.

Carton quantity: 600	**Sleeves per carton**: 12	**Units per sleeve**: 50
Carton Size LxWxH (cm): 54.7x30.2x41.5	**Carton gross weight (kg)**: 11.900000	**Carton barcode**: 19344062009136
Raw material: Bagasse - (100% Sugarcane Pulp)	**Printing Type**: None	**Brim fill capacity (ml)**: 694
Dimensions top LxW (mm): 130x130	**Dimensions base LxW (mm)**: 65x65	**Product Depth**: 90
Product weight (g): 16	**Thickness**: 0.6mm	**Use**: Hot and cold
Manufactured: China	**Customise**: Yes - Please Contact Our Team For More Information	**MOQ custom**: 100000
Mould fees: No	**Environmental production certified**: ISO 14001	**Quality product certified**: ISO 9001
Factory food safety certified: BRC, HACCP	**Corporate social accreditation**: SA 8000	**Home compostable**: No
Industrially compostable: No	**Recyclable**: No	