12oz Double Wall Art Series BioCups
BC-12DW-ART SERIES-UK

*image as a guide only

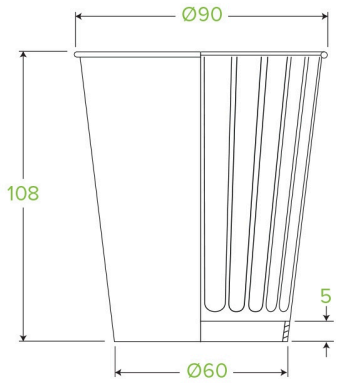

IMAGE AS A GUIDE ONLY. Cartons contain up to three different art cups with new artists featured every two months. Pictured here are designs from the latest Art Series. Unfortunately, we cannot sell individual art cups and cannot guarantee which prints, or which series of prints will be in each carton.

Carton quantity: 1000	**Sleeves per carton**: 25	**Units per sleeve**: 40
Carton Size LxWxH (cm): 47.3x47x60	**Carton gross weight (kg)**: 21.100000	**Carton barcode**: 19344062011498
Raw material: Paper	**Lining/coating**: Bioplastic - Ingeo™ PLA	**Window material**: None
Printing Type: Offset	**Inks**: Food Contact Safe Inks	**Brim fill capacity (ml)**: 391
Dimensions top LxW (mm): 90x90	**Dimensions base LxW (mm)**: 60x60	**Product Depth**: 108
Product weight (g): 18.5	**Thickness**: 285gsm + 35gsm PLA	**Use**: Hot and cold
Manufactured: Taiwan	**Customise**: Print	**MOQ custom**: 50000
Quality product certified: ISO 9001	**Factory food safety certified**: BRC, HACCP	**Home compostable**: No
Industrially compostable: Certified to AS4736 Australian Standards, Certified to EN13432 European Standard	**Recyclable**: No	