6x5" Natural BioCane Produce Trays B-TRAY-6X5-UK

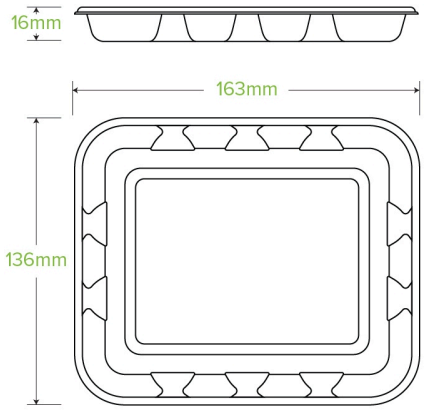

Packaging made from plants, not plastic! Our 6x5" bagasse produce trays are an eco-friendly alternative to traditional plastic or styrofoam produce trays and fruit punnets. These plastic-free produce trays are made from rapidly renewable sugarcane pulp, a by-product of the sugar refining industry. Certified home compostable.

Carton quantity: 1000	**Sleeves per carton**: 8	**Units per sleeve**: 125
Carton Size LxWxH (cm): 34.8x56.5x36	**Carton gross weight (kg)**: 13.400000	**Carton barcode**: 19344062042423
Raw material: Bagasse - (100% Sugarcane Pulp)	**Printing Type**: None	**Dimensions top LxW (mm)**: 163x136
Dimensions base LxW (mm): 145x115	**Product Depth**: 16	**Product weight (g)**: 10.7
Thickness: 0.6mm	**Use**: Cold & Dry Products	**Customise**: Yes - Please Contact Our Team For More Information
MOQ custom: 100000	**Environmental production certified**: ISO 14001	**Quality product certified**: ISO 9001
Factory food safety certified: BRC, HACCP	**Home compostable**: Certified to AS5810 Australian standards, Certified to NF T51-800 European standards	**Industrially compostable**: Certified to AS4736 Australian Standards, Certified to EN13432 European Standard
Recyclable: Yes - In The Paper Recycling if Not Contaminated With Food		