60ml White Sugarcane Sauce BioCup B-SC-60-W

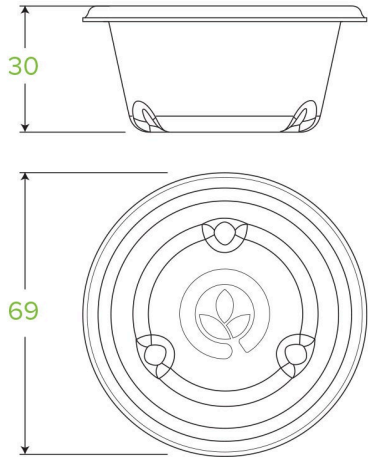

Our tree-free sauce cups are made from rapidly renewable sugarcane pulp, a by-product of the sugar refining industry. They are certified home compostable. It fits our 60ml PET sugarcane sauce cup lid. It does not fit our PLA bioplastic 60ml sauce cup lid.

Carton quantity: 1000	**Sleeves per carton**: 20	**Units per sleeve**: 50
Carton Size LxWxH (cm): 36x27x30	**Carton gross weight (kg)**: 4.500000	**Carton barcode**: 19344062025471
Raw material: Plant Fibre With PFAS	**Lining/coating**: None	**Window material**: None
Printing Type: None	**Inks**: None	**Brim fill capacity (ml)**: 60
Dimensions top LxW (mm): 69	**Dimensions base LxW (mm)**: 50	**Product Depth**: 30
Product weight (g): 3.5	**Thickness**: 0.6mm	**Use**: Hot, Cold, Wet & Dry Products
Manufactured: China	**Customise**: Yes - Please Contact Our Team For More Information	**MOQ custom**: MOQ apply see custom packaging
Mould fees: Yes - see custom packaging	**Environmental production certified**: ISO 14001	**Quality product certified**: ISO 9001
Factory food safety certified: BRC	**Corporate social accreditation**: BSCI	**Home compostable**: No
Industrially compostable: No	**Recyclable**: No	