240ml / 8oz Ice Cream BioCup
BB-BIC-8

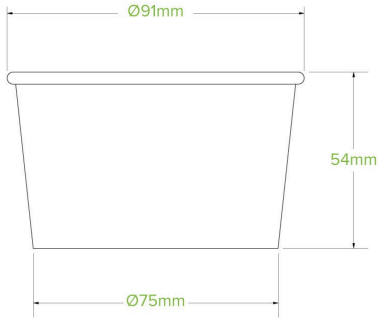

BioPak 240ml / 8oz paper ice cream cups are made from FSC™ certified paper and lined with Ingeo™ – a bioplastic product made from plants, not oil. They are perfectly portioned for serving ice cream, frozen yoghurt or gelato. These ice cream cups are certified industrially compostable.

Carton quantity: 1000	**Sleeves per carton**: 20	**Units per sleeve**: 50
Carton Size LxWxH (cm): 47x37.5x56.5	**Carton gross weight (kg)**: 7.400000	**Carton barcode**: 19344062051944
Raw material: Paper - FSC™ Mix certified paper	**Lining/coating**: Bioplastic - Ingeo™ PLA	**Window material**: None
Printing Type: Flexo	**Inks**: Food Contact Safe Inks - Soy or Water Based	**Brim fill capacity (ml)**: 240
Dimensions top LxW (mm): 91x91	**Dimensions base LxW (mm)**: 75x75	**Product Depth**: 54
Product weight (g): 6	**Thickness**: 190gsm	**Use**: Hot and cold
Manufactured: China	**Customise**: Print	**MOQ custom**: 30000
Mould fees: No	**Environmental production certified**: ISO 14001	**Quality product certified**: NA
Factory food safety certified: BRC, ISO 22000	**Corporate social accreditation**: NONE AVAILABLE	**Home compostable**: No
Industrially compostable: Certified to AS4736 Australian Standards, Certified to EN13432 European Standard	**Recyclable**: No	